Metal Storage Disassembly

Item #	Material
7A, 7B, 7C, 7D	ABS
14A	Zinc
J-Pulls - 20B, 20C, 20D	Aluminum
Storage Drawer Fronts – 18	Steel, Veneer, Landscape/aluminum

All other items are steel

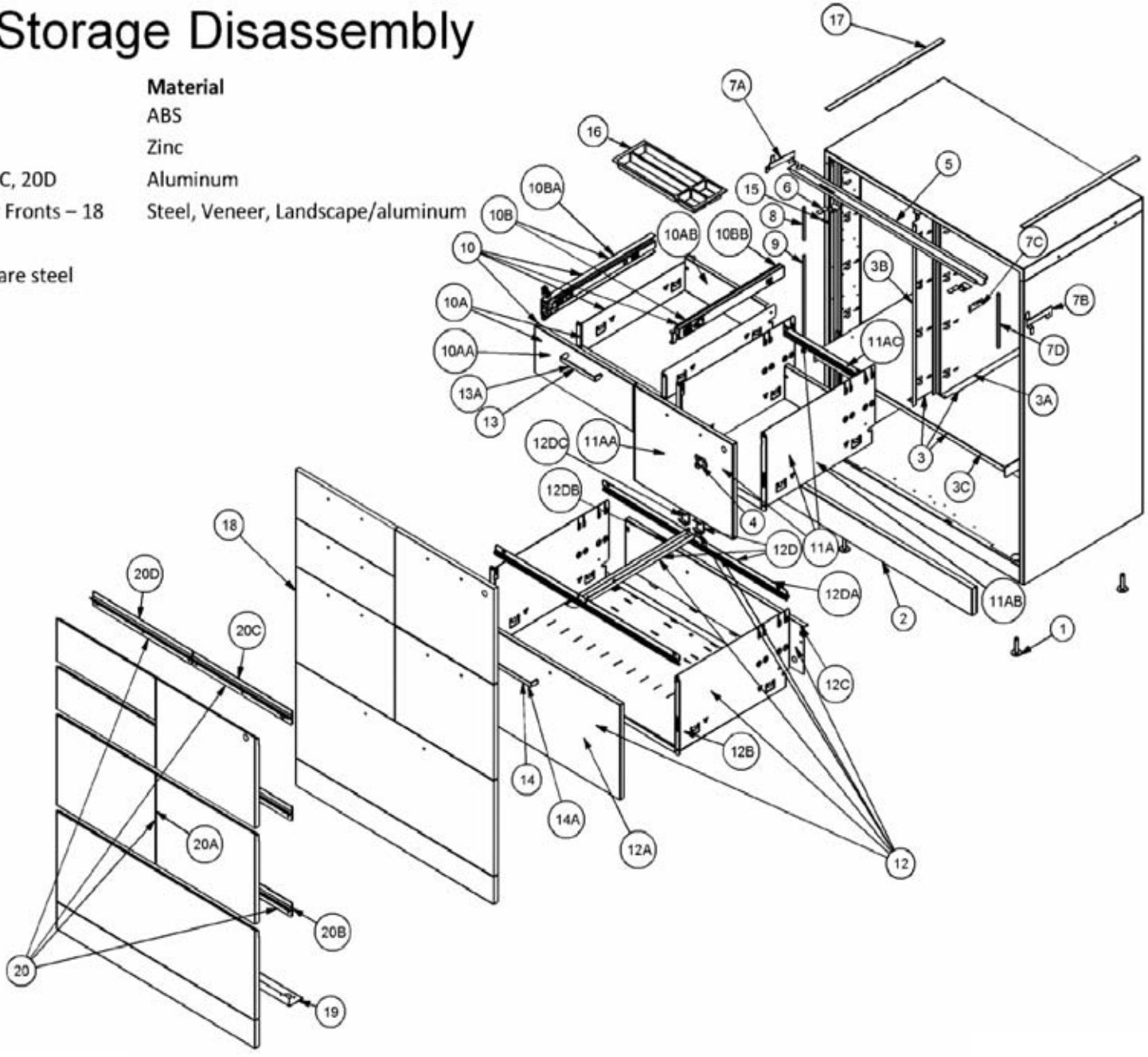

Allsteel®

©2010 Allsteel Inc.